BOBRICK

Technical Data

SURFACE-MOUNTED PAPER CUP DISPENSER

B-235

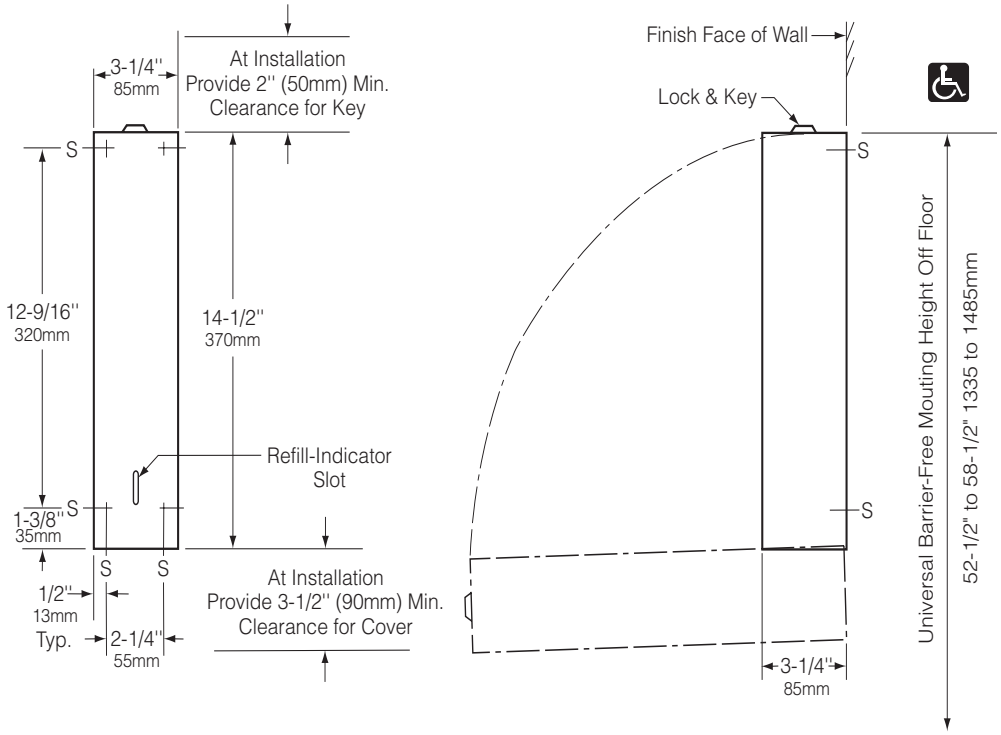

MATERIALS:

Cover — 18-8 S, type-304, 22-gauge (0.8mm) stainless steel. All-welded construction. Exposed surfaces have satin finish. Equipped with an adjustable bracket to hold cups, a refill-indicator slot, and a tumbler lock keyed like other Bobrick washroom accessories. Secured to mounting plate with a full-length stainless steel piano-hinge.

Mounting Plate — 18-8 S, type-304, 22-gauge (0.8mm) stainless steel.

OPERATION:

Cups pull down out of unit. To load, unlock with key provided and swing cover down. Unit holds 150 3-oz (0.1-L) paper or plastic flat-bottom cups. Bracket inside cover adjusts to hold up to 6-oz (0.2-L) cups. Slot on front indicates refill time.

INSTALLATION:

Mount unit on wall with four #8 x 1-1/4" (4.2 x 32mm) sheet-metal screws (not furnished) at points indicated by an *S*. For plaster or dry wall construction, provide concealed backing to comply with local building codes, then secure unit with sheet-metal screws. For other wall surfaces, provide fiber plugs or expansion shields for use with sheet-metal screws, or provide 1/8" (3mm) toggle bolts or expansion bolts. If unit projects above top of wainscot, provide aluminum channel or other filler to eliminate gap between mounting plate and finish face of wall.

SPECIFICATION:

Surface-mounted paper cup dispenser shall be type-304 stainless steel with all welded construction; exposed surfaces shall have satin finish. Cover of unit shall be secured to mounting plate with a full-length stainless steel piano-hinge and equipped with a refill-indicator slot and a tumbler lock keyed like other Bobrick washroom accessories. Unit shall be adjustable to dispense 3- to 6-oz (0.1- to 0.2-L) paper or plastic flat-bottom cups. Manufacturer's service and parts manual shall be provided to the building owner/manager upon completion of project.

Surface-Mounted Paper Cup Dispenser shall be Model B-235 of Bobrick Washroom Equipment, Inc., Clifton Park, New York; Jackson, Tennessee; Los Angeles, California; Bobrick Washroom Equipment Company, Scarborough, Ontario; Bobrick Washroom Equipment Pty. Ltd., Australia; and Bobrick Washroom Equipment Limited, United Kingdom.

The illustrations and descriptions herein are applicable to production as of the date of this Technical Data Sheet.
The manufacturer reserves the right to, and does from time to time, make changes and improvements in designs and dimensions.

Revised 6/06 Printed in U.S.A.
©2006 by Bobrick Washroom Equipment, Inc.